Tableau 3. *Distances* C(*sp*)···C(*sp*) *dans divers composés diacétyléniques uréthanes polymérisables*

		D(Å)	Arrangement des chaînes diacétyléniques
Critères de Baughman (1974)	Activité forte	<3,54	
	Activité nulle	>4,02	Chaînes ‖
Composés actifs	HDpCPU	4,31	Chaînes ‖
	TCDU	3,50	Chaînes ‖
	HDmTU	3,61	Angle entre chaînes: 72°
	UDD (I)	3,94	Angle entre chaînes: 6°
	HDPU (II)	4,91 (1)	Chaînes ‖
		4,29 (1)	Angle entre chaînes: 35 (4)°

Polymerisabilité du HDPU (II). Les composés diacétyléniques R—C≡C—C≡C—R sont susceptibles de se polymériser par 1,4 *trans–trans* addition (Wegner, 1972). Ce phénomène, décrit simplement dans le cas d'empilement infini de chaînes diacétyléniques parallèles peut encore exister lorsque les chaînes sont obliques comme dans le HDmTU (Patel *et al.*, 1980) et le UDD (I) (Wilson *et al.*, 1982). Dans le cas du HDPU, forme II, on observe également une polymérisation, au moins partielle, des molécules monomères, bien qu'elles ne soient pas toutes parallèles, puisque les cristaux acquièrent une coloration bleu violet intense sous irradiation X à température ambiante. Baughman (1974) a proposé des critères permettant de justifier et prévoir l'activité d'un monomère à l'état cristallin. Seul le critère D, distance entre atomes C(2) ou C′(2) (Fig. 1), susceptibles de se relier au cours de la polymérisation peut être considéré à la fois dans le cas d'empilement infini de chaînes diacétyléniques parallèles et dans celui de chaînes non parallèles. Les distances D calculées (Tableau 3) dans la molécule monomère de HDPU (II) sont nettement supérieures [en particulier $D_{\parallel} = 4{,}91$ (1) Å], non seulement à celles définies par Baughman mais également à celles observées dans d'autres composés actifs du même type. Il est donc surprenant que ce composé ne soit pas inactif. Seule une étude de l'arrangement structural du polymère HDPU (II) permettra de comprendre les déplacements moléculaires intervenant lors de la polymérisation de ce composé.

Nous remercions très vivement Dr Patel de nous avoir fourni ce composé. Nous remercions également B. Bachet pour sa contribution efficace aux mesures diffractométriques.

Références

BAUGHMAN, R. H. (1974). *J. Polym. Sci.* **12**, 1511–1535.

BROUTY, C., SPINAT, P. & WHULER, A. (1983). *Acta Cryst.* C**39**, 594–597.

BUSING, W. R., MARTIN, K. O. & LEVY, H. A. (1962). *ORFLS*. Report ORNL-TM-305. Oak Ridge National Laboratory, Tennessee.

CROMER, D. T. & MANN, J. B. (1968). *Acta Cryst.* A**24**, 321–324.

GERMAIN, G., MAIN, P. & WOOLFSON, M. M. (1971). *Acta Cryst.* A**27**, 368–376.

GROSS, H., SIXL, H., KRÖHNKE, C. & ENKELMANN, V. (1980). *Chem. Phys.* **45**, 15–26.

HÄDICKE, E., MEZ, E. C., KRAUCH, C. H., WEGNER, G. & KAISER, J. (1971). *Angew. Chem. Int. Ed. Engl.* **10**, 266–267.

KAISER, J., WEGNER, G. & FISCHER, E. W. (1972). *Isr. J. Chem.* **10**, 157–171.

PATEL, G. N., DUESLER, E. N., CURTIN, D. Y. & PAUL, I. C. (1980). *J. Am. Chem. Soc.* **102**, 461–466.

WEGNER, G. (1972). *Makromol. Chem.* **154**, 35–48.

WHULER, A., SPINAT, P. & BROUTY, C. (1983). Powder Diffraction File, Swarthmore, PA: JCPDS. Sous presse.

WILSON, R. B., DUESLER, E. N., CURTIN, D. Y., PAUL, I. C., BAUGHMAN, R. H. & PREZIOSI, A. F. (1982). *J. Am. Chem. Soc.* **104**, 509–516.

Acta Cryst. (1984). C**40**, 696–700

Low-Temperature (173 K) Structure of the 'Strapped' Porphyrin: 2,12-Diethyl-3,7,13,17-tetramethyl-8,18-nonamethylene-21*H*,23*H*-porphyrin Methanol Solvate, $C_{37}H_{46}N_4.2CH_4O$

BY F. W. B. EINSTEIN AND T. JONES

Department of Chemistry, Simon Fraser University, Burnaby, British Columbia, Canada V5A 1S6

(*Received* 13 *September* 1983; *accepted* 12 *December* 1983)

Abstract. $M_r = 610{\cdot}89$, monoclinic, $P2_1/c$, $a = 14{\cdot}774$ (3), $b = 13{\cdot}823$ (3), $c = 17{\cdot}634$ (2) Å, $\beta = 103{\cdot}31$ (1)°, $V = 3504{\cdot}50$ Å^3, $Z = 4$, $D_x = 1{\cdot}158$ Mg m^{-3}, λ(Mo $K\alpha_1$) = 0·70926 Å, $\mu = 0{\cdot}067$ mm^{-1}, $F(000) = 1184$, $T = 173$ K. Final $R = 0{\cdot}036$ for 2349 observed reflections. The structure consists of a free-base porphyrin which exhibits considerable folding as the result of a nine-carbon 'strap' which spans diametrically opposed β-positions. Atom-pyramidalization calculations indicate that the strain induced by this folding is distributed throughout the entire molecule.

0108-2701/84/040696-05$01.50 © 1984 International Union of Crystallography

Introduction. Synthetic studies have been undertaken to produce a series of 'strapped' porphyrins (Wijesekera, Paine, Dolphin, Einstein & Jones, 1983, unpublished results). The 'straps' in question consist of linear arrangements of methylene units ($n = 9$–11) which span β-positions of diagonally opposed pyrrole rings (see below). The purpose of these syntheses was to produce highly deformed porphyrins which could be studied to establish the effect such deformations may have on their chemistry; *viz.* the stability and aromaticity of the porphyrin core and the relationship between doming and hemoglobin cooperativity in reversible oxygen binding (Traylor, 1981). The present contribution reports the low-temperature structure of the nonamethylene ($n = 9$) 'strapped' porphyrin (PC_9) and discusses the effect of deformation upon aromaticity and also how the strain resulting from deformity is distributed throughout the molecule.

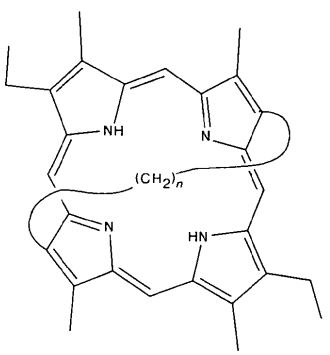

Experimental. Deep-violet crystal (from methanol), 0·4 × 0·4 × 0·4 mm, Picker FACS-I diffractometer, graphite-monochromated Mo $K\alpha$, cryogenic goniometer head (AC-1-101A Cryotip refrigerator, Air Products and Chemical, Inc.); lattice parameters from 26 reflections ($2\theta = 27$–$34°$); symmetrical θ–2θ scans ($2°$ min^{-1} in 2θ) of $(1{\cdot}4 + 0{\cdot}693\tan\theta)°$, peak-profile analysis (Grant & Gabe, 1978); 3723 $hk\pm l$ (h 0→15, k 0→13, l −17→18) with $2\theta \leq 42°$, 2349 with $I \geq 2{\cdot}3\sigma(I)$, Lp correction, no absorption correction, 2 standard reflections, ±2% intensity variation; direct methods (NRC program system; Gabe, Larsen, Lee & Wang, 1979).

Subsequent to the location of the porphyrin molecule, ΔF maps revealed the positions of two molecules of methanol of crystallization, hydrogen-bonded to one another *via* OH(1) and O(2). After assignment of these atoms, there were still two large residual peaks [0·50 (3) e Å^{-3}] very close to the hydroxyl hydrogen HO(1) [attached to O(1) of methanol 1] and the methyl hydrogen H*CCS*(2) [attached to C*S*(2) of methanol 2]. These peaks could only be explained in terms of a disordered model involving two molecules of dichloromethane of crystallization, with fractional occupancy 0·03, superimposed upon the two molecules of methanol of crystallization, with fractional occupancy 0·97. This disordered model was arrived at by consideration of the results obtained when occupancy, temperature factors and coordinates of the solvent were allowed to refine simultaneously while the porphyrin atoms were fixed. The presence of dichloromethane in the crystals, which had been recrystallized finally from methanol but previously from dichloromethane, was subsequently confirmed by mass-spectral data.

Final cycles of full-matrix refinement on $|F|$, non-H atoms anisotropic, H atoms (from ΔF synthesis) with isotropic temperature factors and positions fixed in previously refined positions: final $R = 0{\cdot}036$, 406 variables; unit weights; $(\Delta/\sigma)_{max} = 0{\cdot}20$; atomic scattering factors with f' and f'' (Cromer & Waber, 1974); final ΔF map featureless apart from ±0·20 (3) e Å^{-3} peaks in solvent region; PDP-8e computer (Crystallography Laboratory, Chemistry Department) and an IBM 370/155 computer (Computer Centre, Simon Fraser University); computer programs: previously cited (Einstein & Jones, 1972) and NRC (Gabe *et al.*, 1979).

Discussion. Final positional and equivalent isotropic thermal parameters for the non-H atoms may be found in Table 1.* The crystal structure consists of four discrete porphyrin molecules and eight molecules of methanol of crystallization per unit cell. The methanol molecules are grouped together in four pairs, each pair joined together *via* a hydrogen bond (the presence of trace quantities of dichloromethane in place of a pair of methanol molecules has been discussed in the *Experimental*). The shortest inter-porphyrin distances are approximately 2·4 Å and occur between the H atoms of peripheral alkyl groups and H atoms of the 'strap'. The shortest distances between solvent and porphyrin molecules are 2·6 Å for NH(4)—HO(2) and 2·8 Å for HN(2)—HO(2). The molecular structure and numbering scheme are shown in Fig. 1. The most striking feature of this porphyrin structure is the distortion of the porphyrin core (Fig. 2). The angle between the best planes (Table 2) of pyrrole rings (1) and (3) is 111·5 (4)°, whereas the corresponding angle between rings (2) and (4) is 13·5 (4)°. The effect this folding is likely to have on the aromaticity of the porphyrin has been examined by determining the expressions for atom pyramidalization (χ_{pyr}) and bond twist angle (τ_{twist}) (Winkler & Dunitz, 1971). Table 3 contains χ_{pyr} and τ_{twist} values for the inner core of the porphyrin ring. There are a number of points worthy of

* Lists of structure factors, anisotropic thermal parameters, H-atom parameters, bond lengths, angles and transannular distances have been deposited with the British Library Lending Division as Supplementary Publication No. SUP 39113 (36 pp.). Copies may be obtained through The Executive Secretary, International Union of Crystallography, 5 Abbey Square, Chester CH1 2HU, England.

Table 1. *Final positional* ($\times 10^5$) *and equivalent isotropic thermal parameters for* PC_9

	x	y	z	B_{eq}*(Å^2)
N(1)	15246 (18)	38609 (20)	33035 (15)	2·50
N(2)	35084 (18)	35690 (20)	37046 (15)	2·54
N(3)	33611 (18)	32160 (20)	20281 (15)	2·51
N(4)	13462 (18)	33252 (20)	16627 (15)	2·34
C(1)	6961 (23)	42895 (25)	29583 (19)	2·57
C(2)	4292 (23)	50193 (26)	34660 (19)	2·63
C(3)	10517 (24)	49357 (26)	41586 (19)	2·83
C(4)	17363 (23)	42310 (25)	40456 (20)	2·55
C(5)	25590 (23)	40480 (25)	45999 (18)	2·66
C(6)	33879 (23)	37447 (25)	44469 (19)	2·47
C(7)	42981 (23)	37369 (25)	49520 (18)	2·47
C(8)	49388 (23)	36396 (25)	45041 (19)	2·51
C(9)	44357 (22)	35645 (24)	37037 (19)	2·45
C(10)	47600 (22)	36420 (25)	30289 (20)	2·70
C(11)	42402 (23)	35956 (25)	22589 (10)	2·46
C(12)	45754 (23)	39343 (26)	15948 (19)	2·79
C(13)	39325 (23)	36647 (25)	9513 (19)	2·78
C(14)	31721 (23)	32451 (25)	12265 (19)	2·60
C(15)	23087 (25)	30056 (25)	7464 (19)	2·73
C(16)	14634 (24)	30443 (25)	9426 (19)	2·51
C(17)	5411 (24)	30333 (25)	4376 (19)	2·59
C(18)	−734 (23)	33778 (25)	8414 (20)	2·51
C(19)	4394 (23)	35827 (24)	16233 (20)	2·39
C(20)	1595 (23)	40728 (25)	22182 (20)	2·63
C(21)	−1924 (24)	58463 (27)	31680 (21)	3·25
C(22)	1813 (25)	64289 (27)	25502 (22)	3·54
C(23)	12326 (26)	66639 (28)	27661 (22)	3·80
C(24)	17767 (25)	62192 (29)	22240 (22)	3·70
C(25)	28325 (25)	62991 (27)	24841 (20)	3·51
C(26)	33496 (24)	59237 (28)	18836 (21)	3·34
C(27)	44024 (25)	60219 (27)	21297 (21)	3·45
C(28)	49436 (25)	56950 (29)	15244 (21)	3·46
C(29)	53332 (24)	46606 (29)	16338 (21)	3·38
C(30)	11262 (26)	55334 (30)	48779 (21)	4·00
C(31)	44981 (25)	38715 (27)	58202 (19)	3·30
C(32)	39285 (26)	38693 (29)	1188 (20)	3·70
C(33)	3443 (25)	27505 (29)	−4070 (21)	3·60
C(34)	59749 (24)	36194 (28)	47864 (20)	3·23
C(35)	63385 (29)	26433 (33)	51185 (29)	5·53
C(36)	−10973 (24)	35625 (28)	5399 (20)	3·17
C(37)	−12998 (29)	45652 (33)	2016 (26)	4·95
CS(1)	23227 (37)	−10381 (39)	18522 (30)	4·99
CS(2)	24668 (27)	13232 (32)	31181 (24)	3·66
O(1)	28048 (21)	−2843 (23)	15945 (17)	5·60
O(2)	27154 (21)	13307 (21)	23978 (18)	5·26

$$* B_{eq} = \tfrac{8}{3}\pi^2(U_{11} + U_{22} + U_{33}).$$

Table 2. *Mean-plane calculations for atoms within the pyrrole rings*

The equations of the planes are referred to orthogonal axes *a*, *b* and *c**.

Plane	Equation	χ^2
(1)	$0{\cdot}6223x + 0{\cdot}7169y - 0{\cdot}3144z - 2{\cdot}5853 = 0$	358·32
(2)	$0{\cdot}5974x + 0{\cdot}7346y - 0{\cdot}3216z - 2{\cdot}6282 = 0$	50·45
(3)	$0{\cdot}0515x + 0{\cdot}9922y - 0{\cdot}1135z - 4{\cdot}4009 = 0$	374·18
(4)	$0{\cdot}4371x - 0{\cdot}8992y - 0{\cdot}0202z + 2{\cdot}2409 = 0$	241·17
(5)	$0{\cdot}4118x - 0{\cdot}9110y - 0{\cdot}0215z + 2{\cdot}4131 = 0$	9·89
(6)	$0{\cdot}2275x + 0{\cdot}9383y - 0{\cdot}2605z - 3{\cdot}9002 = 0$	284·28

Deviations from the best plane (Å)

	Plane (1)	Plane (2)		Plane (3)
N(1)	0·025 (3)	0·014 (3)	N(2)	−0·038 (3)
C(1)	−0·039 (3)	−0·008 (3)	C(6)	0·034 (4)
C(2)	0·037 (4)	0·094 (4)†	C(7)	−0·017 (4)
C(3)	−0·022 (4)	0·008 (4)	C(8)	−0·005 (4)
C(4)	−0·002 (3)	−0·013 (3)	C(9)	0·027 (3)
	Plane (4)	**Plane (5)**		**Plane (6)**
N(3)	−0·016 (3)	−0·006 (3)	N(4)	−0·032 (4)
C(11)	0·031 (4)	0·004 (4)	C(16)	0·032 (4)
C(12)	−0·033 (4)	−0·083 (4)†	C(17)	−0·020 (4)
C(13)	0·023 (4)	−0·004 (4)	C(18)	0·002 (4)
C(14)	−0·005 (4)	0·006 (4)	C(19)	0·019 (3)

† This atom has not been included in the mean-plane calculation.

Table 3. *Atom-pyramidalization* (χ_{pyr}) *and bond-twist* (τ_{twist}) *parameters for the porphyrin core*

The expressions χ_{pyr} and τ_{twist} are defined as follows: (i) χ_{pyr} for a C_a atom, *e.g.* C(1), is the dihedral angle between plane [C(1), C(2), C(20)] and plane [C(20), C(1), N(1)]. (ii) χ_{pyr} for a C_m atom, *e.g.* C(5), is the dihedral angle between plane [C(4), C(5), H*A*(5)] and plane [C(5), C(6), H*A*(5)]. (iii) τ_{twist} for a C_a–C_m bond, *e.g.* C(4)–C(5), is the average of the torsion angles ω[N(1), C(4), C(5), H*A*(5)] and ω[C(3), C(4), C(5), C(6)], 'with due regard to the sign of each torsion angle with respect to the other'.

Errors in these angles are typically ±0·4° for χ_{pyr} (C_a) and ±3° for χ_{pyr} (C_m) and τ_{twist}.

C_a	χ_{pyr}(°)	C_m	χ_{pyr}(°)	C_a–C_m	τ_{twist}(°)
C(1)	0·0	C(5)	11	C(1)–C(20)	14
C(4)	7·9	C(10)	4	C(4)–C(5)	20
C(6)	13·9	C(15)	10	C(5)–C(6)	2
C(9)	12·2	C(20)	5	C(9)–C(10)	6
C(11)	1·0			C(10)–C(11)	16
C(14)	8·1			C(14)–C(15)	23
C(16)	15·7			C(15)–C(16)	3
C(19)	10·2			C(19)–C(20)	5

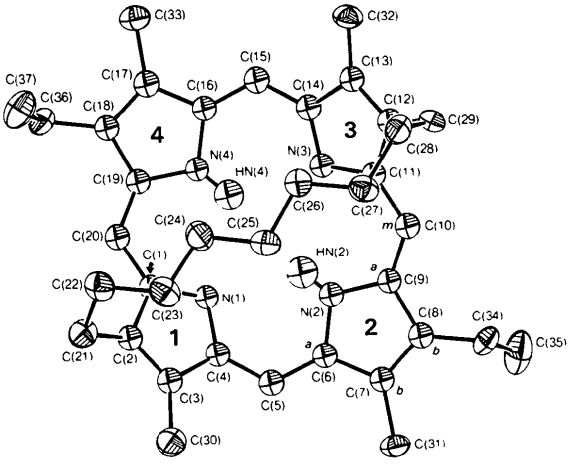

Fig. 1. *ORTEP* diagram (Johnson, 1965) showing the molecular structure and labeling scheme for PC_9, omitting all H atoms except for those of the amino pyrrole rings (50% probability contours for all atoms).

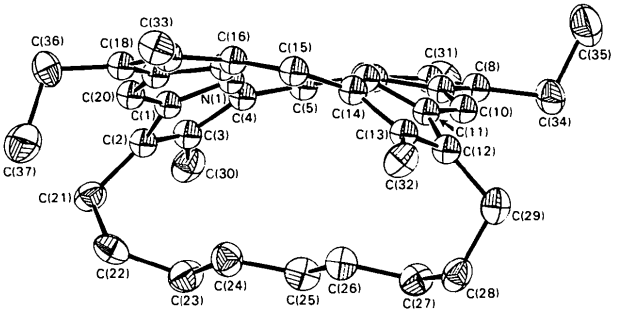

Fig. 2. An *ORTEP* side view of the PC_9 molecule indicating the degree of distortion of the porphyrin core. All H atoms have been omitted (50% probability contours for all atoms).

Table 4. *Average bond distances* (Å) *and angles* (°) *for some free-base porphyrins*

Bond[a]	OEP[b,c]	MP-IXDME[b,d]	PC_9[b,e]
C_a–C_m–C_a	127·6 (2)	127·7 (2)	126·9 (6)
Imino pyrrole ring			
C_m–C_a	1·394 (2)	1·391 (3)	1·397 (5)
N–C_a	1·364 (2)	1·366 (3)	1·373 (4)
C_a–C_b	1·462 (2)	1·457 (3)	1·452 (6)
C_b–C_b	1·353 (2)	1·359 (5)	1·354 (5)
C_a–N–C_a	105·7 (2)	105·7 (2)	104·3 (3)
N–C_a–C_b	110·8 (2)	110·9 (2)	111·4 (3)
C_a–C_b–C_b	106·3 (2)	106·3 (2)	106·2 (3)
N–C_a–C_m	125·1 (2)	124·7 (3)	124·8 (6)
C_b–C_a–C_m	124·0 (2)	124·4 (3)	123·6 (4)
Amino pyrrole ring			
C_m–C_a	1·390 (2)	1·386 (5)	1·382 (6)
N–C_a	1·367 (2)	1·365 (3)	1·375 (4)
C_a–C_b	1·438 (2)	1·438 (3)	1·440 (4)
C_b–C_b	1·373 (2)	1·368 (3)	1·367 (5)
C_a–N–C_a	109·6 (2)	109·8 (2)	110·6 (3)
N–C_a–C_b	107·7 (2)	107·5 (2)	106·4 (4)
C_a–C_b–C_b	107·4 (2)	107·6 (2)	108·1 (4)
N–C_a–C_m	125·0 (2)	125·3 (2)	123·4 (4)
C_b–C_a–C_m	127·3 (2)	127·2 (2)	129·2 (3)

(*a*) The subscripts *a, b, m* are those described by Hoard (1971) and are also defined in Fig. 1.
(*b*) The errors quoted in parentheses are the larger of the standard deviations estimated for an individual value from the inverse matrix or on the assumption that the values averaged are from the same population.
(*c*) OEP denotes octaethylporphyrin (Lauher & Ibers, 1973).
(*d*) MP-IXDME denotes mesoporphyrin IX dimethyl ester (Little & Ibers, 1975).
(*e*) This work; errors associated with bond distances and angles are typically 0·005 Å and 0·3°.

note: (i) the C_a atoms in the nonstrapped pyrrole rings have the largest values of χ_{pyr}; (ii) the χ_{pyr} values for the two pairs of equivalent C_m atoms, *i.e.* C(5)/C(15) and C(10)/C(20), are approximately equal; (iii) the C_a–C_m bonds associated with the strapped pyrrole rings give rise to the largest τ_{twist} values. These observations tend to suggest that the strain imposed by the 'strap' is distributed throughout the entire porphyrin molecule; consequently, only a small change in aromaticity might be expected. Indeed, electronic and NMR spectra are consistent with a small but significant change in aromaticity (Wijesekera, Paine, Dolphin, Einstein & Jones, 1983, unpublished results).

Further evidence in support of the even distribution of strain throughout the entire molecule is found by examining the planarity of each individual pyrrole ring (Table 2). The imino pyrrole rings (rings 1 and 3) have ring C atoms C(2) and C(12), which are linked together *via* the 'strap', well out [0·08–0·09 (4) Å] of the mean planes calculated for the remaining four atoms in their respective rings. Furthermore, the C_a atoms C(6) and C(9) in ring (2) and C(16) and C(19) in ring (4), lie out of the plane made by the three other atoms in their respective rings, in a direction towards the strap. These deviations from planarity are in direct contrast to the situation found in 'unstrapped' porphyrins where pyrrole rings are essentially planar (Codding & Tulinsky, 1972; Chen & Tulinsky, 1972; Lauher & Ibers, 1973; Little & Ibers, 1975; Scheidt, 1978).

Bond distances and angles for the present 'distorted' porphyrin are quite similar to those found in other 'unstrapped' free-base porphyrin molecules (Table 4) and appear to reflect the presence of altering amino (rings 2 and 4) and imino (rings 1 and 3) rings. In fact, the only marked differences between PC_9 and these porphyrins occur for the amino C_b–C_a–C_m and N–C_a–C_m angles, which are larger and smaller, respectively, in PC_9. These relatively minor changes, brought about by the 'strap', are again consistent with the even distribution of strain throughout the molecule.

Transannular parameters calculated for PC_9 (transannular data have been deposited)* are close to those found in the symmetrically substituted porphyrins OEP (Lauher & Ibers, 1973) and porphine (Chen & Tulinsky, 1972). However, there is a certain asymmetry associated with the PC_9 parameters, as a result of folding, which is not found in OEP or porphine [*e.g.* in PC_9, C(10)–C(20) = 6·642 Å < C(5)–C(15) = 6·873 Å, whereas in OEP and porphine these distances are almost equal]. It is of interest to note the differences observed between PC_9 and symmetrically substituted porphyrins are no greater than those between MP-IXDME (Little & Ibers, 1975) (an undistorted asymmetrically substituted porphyrin) and these structures.

Some indication of the space in the central cavity of the porphyrin is given by the average N···*Ct*† distances and the distance of the strap above *Ct*. These distances are 2·00 Å (imino) and 2·12 Å (amino) and are close to those previously observed (Scheidt, 1978); *cf.* the average values deduced from a number of undistorted free-base porphyrin structures – 2·03 Å (imino) and 2·08 Å (amino) (Scheidt, 1978). The closest atoms from the strap to *Ct* are H*A*(24) at 3·07 Å and H*A*(26) at 3·16 Å.

We would like to thank NSERC of Canada for financial support, and Dr D. Dolphin (University of British Columbia) for his gift of the crystals.

* See previous footnote.
† *Ct* is the central point of the porphyrin core as determined by averaging the coordinates of the N atoms.

References

CHEN, B. M. L. & TULINSKY, A. (1972). *J. Am. Chem. Soc.* **89**, 4144–4150.
CODDING, P. W. & TULINSKY, A. (1972). *J. Am. Chem. Soc.* **94**, 4151–4157.
CROMER, D. T. & WABER, J. T. (1974). In *International Tables for X-ray Crystallography*, Vol. IV. Birmingham: Kynoch Press.
EINSTEIN, F. W. B. & JONES, R. D. G. (1972). *Inorg. Chem.* **11**, 395–400.

GABE, E. J., LARSEN, A. C., LEE, F. L. & WANG, Y. (1979). *The NSERC PDP-8e Crystal Structure System.* Ottawa, Canada.
GRANT, D. F. & GABE, E. J. (1978). *J. Appl. Cryst.* **11**, 114–120.
HOARD, J. L. (1971). *Science,* **174**, 1295–1302.
JOHNSON, C. K. (1965). *ORTEP.* Report ORNL-3794. Oak Ridge National Laboratory, Tennessee.
LAUHER, J. W. & IBERS, J. A. (1973). *J. Am. Chem. Soc.* **95**, 5146–5152.
LITTLE, R. G. & IBERS, J. A. (1975). *J. Am. Chem. Soc.* **97**, 5363–5368.
SCHEIDT, W. R. (1978). In *The Porphyrins,* Vol. III. *Physical Chemistry, Part A,* edited by D. DOLPHIN, and references therein. New York: Academic Press.
TRAYLOR, T. G. (1981). *Acc. Chem. Res.* **14**, 102–109.
WINKLER, F. K. & DUNITZ, J. D. (1971). *J. Mol. Biol.* **59**, 169–182.

Acta Cryst. (1984). C**40**, 700–703

Structure of Salbomycin, $C_{54}H_{88}O_{18}.2H_2O$

BY ERICH F. PAULUS AND LÁSZLÓ VERTESY

Hoechst AG, D-6230 Frankfurt 60, Federal Republic of Germany

AND GEORGE M. SHELDRICK

Institut für Anorganische Chemie der Universität, Tammannstrasse 4, D-3400 Göttingen, Federal Republic of Germany

(*Received 5 July* 1983; *accepted* 22 *December* 1983)

Abstract. Salbomycin, a new kind of antibiotic, has the systematic name 8,16-bis{3-[4-(4,5-dihydroxy-6-methyl-2-tetrahydropyranyloxy)-5-ethyl-2-hydroxy-6-methyl-2-tetrahydropyranyl]-2-hydroxy-1-methylbutyl}-7,15-dimethyl-1,9-dioxacyclohexadeca-3,5,11,13-tetraene-2,10-dione dihydrate. $M_r = 1061\cdot15$, monoclinic, $P2_1$, $a = 9\cdot770$ (2), $b = 10\cdot037$ (3), $c = 30\cdot890$ (5) Å, $\beta = 92\cdot58$ (2)°, $U = 3026\cdot05$ Å^3, $Z = 2$, $D_m = 1\cdot17$ (flotation in CCl_4/*n*-heptane mixture), $D_x = 1\cdot165$ Mg m^{-3}, Cu $K\alpha$, $\lambda = 1\cdot54184$ Å, $\mu = 0\cdot672$ mm^{-1}, $F(000) = 1152$, $T = 140$ K, $R_2 = 0\cdot053$ for 3660 unique diffractometer data [$F^2 > \sigma(F^2)$]. The molecule consists of two almost identical subunits and has 26 chiral C atoms. The central region of the molecule is a macrolidic [Woodward (1957). *Angew. Chem.* **69**, 50–58] sixteen-membered ring with two lactone groups. There are two chains of deoxysaccharides attached to opposite atoms on the macrolidic ring. The molecule has a plate-like conformation with polar and nonpolar sides, which accounts for its action on biological membranes.

Introduction. *Streptomyces albus*, ATCC 21838 (DSM 2566) is able to generate an unusual natural product, salbomycin, which we could not relate to any group of known compounds (Vertesy & Paulus, 1982). *Streptomyces albus* was cultivated aerobically in a complex aqueous medium; salbomycin was then extracted with acetone, purified by chromatography on silica gel and recrystallized. It was not possible to obtain even an approximate structure by spectroscopic methods, and the mass spectrum did not reveal the molecular weight.

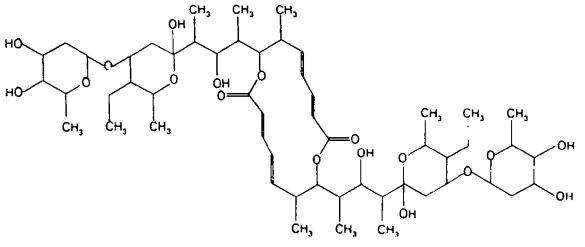

(I)

Experimental. Sample recrystallized from methanol, crystal 0·48 × 0·43 × 0·32 mm; molecules are light sensitive in solution, but not in solid state; crystal sealed in Lindemann-glass capillary; 25 reflections with $2\theta > 19\cdot6°$ used for cell refinement, 1 standard reflection, variation 2·6%; 3660 of the 4080 unique reflections had $I > \sigma(I)$ and were used for structure analysis; Nicolet *R*3 computer-controlled diffractometer, $2\theta/\theta$ scan, $2\theta_{max} = 110°$, 3° min^{-1}; no corrections for absorption or extinction; $-10 \le h \le 10$, $0 \le k \le 10$, $0 \le l \le 32$. The solution of the phase problem by direct methods proved difficult, although the intensities were collected at low temperature to improve the resolution. After many attempts using a variety of programs the structure was solved by the new random-start multisolution program *SHELX*84 (G. M. Sheldrick) in an almost routine run. Because there was no prior structural information it was necessary to distinguish between carbon and oxygen atoms. It soon became clear that the molecule consists of two subunits. Although differentiation between O and C was scarcely

0108-2701/84/040700-04$01.50 © 1984 International Union of Crystallography